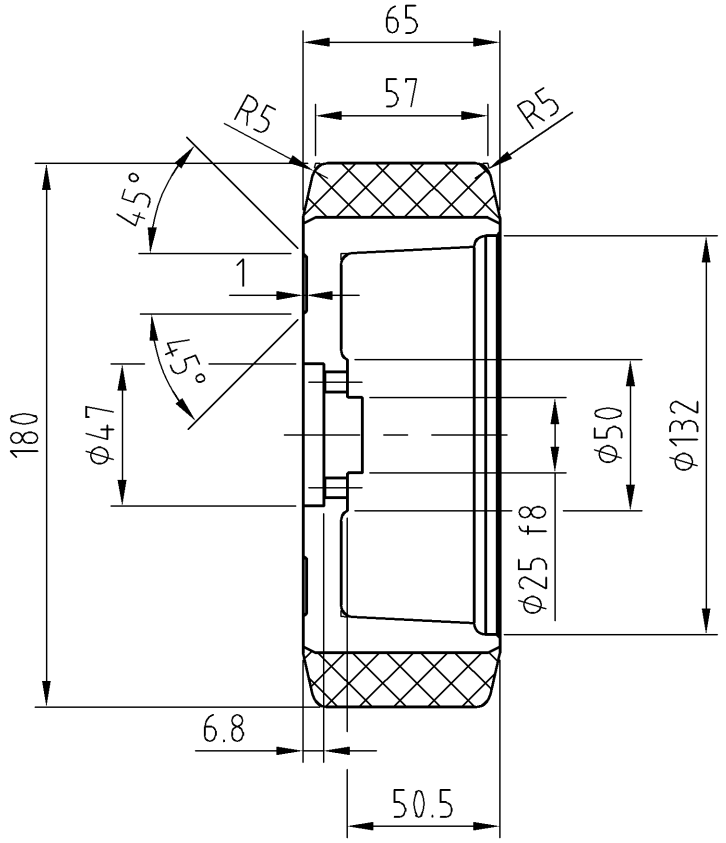


X-X

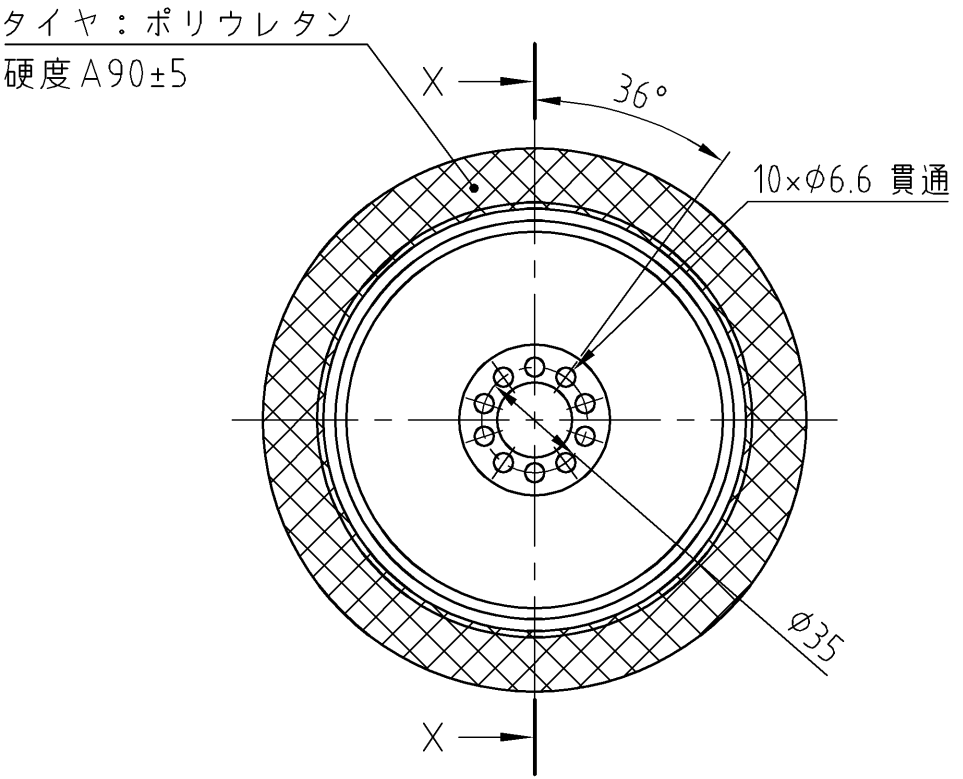


| | |
|---|---|
| Sumitomo Drive Technologies<br>Sumitomo Heavy Industries, Ltd. | smartris OUTLINE DRAWING |
| | DWG.NO. CH62676G0 |

5087E