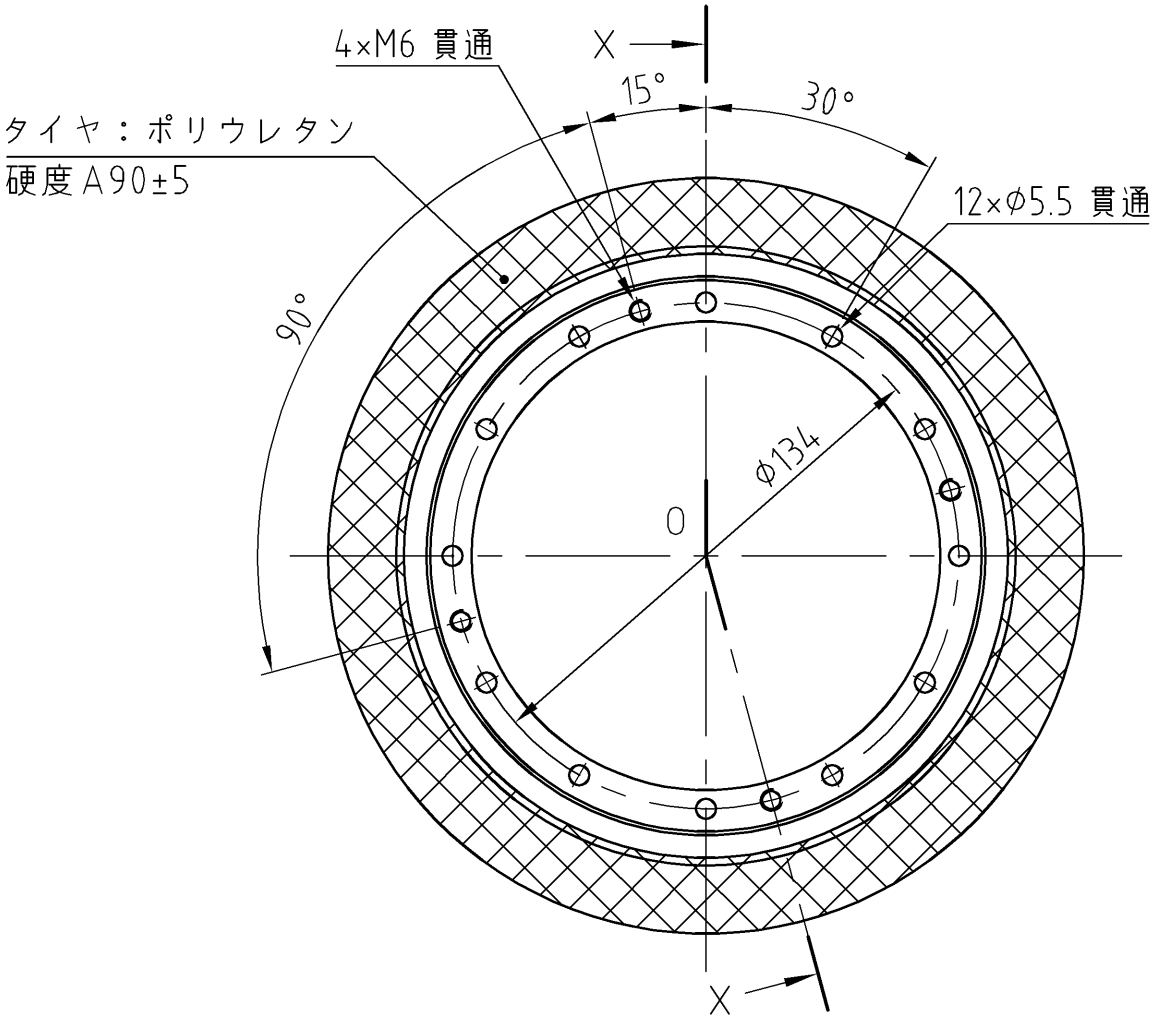

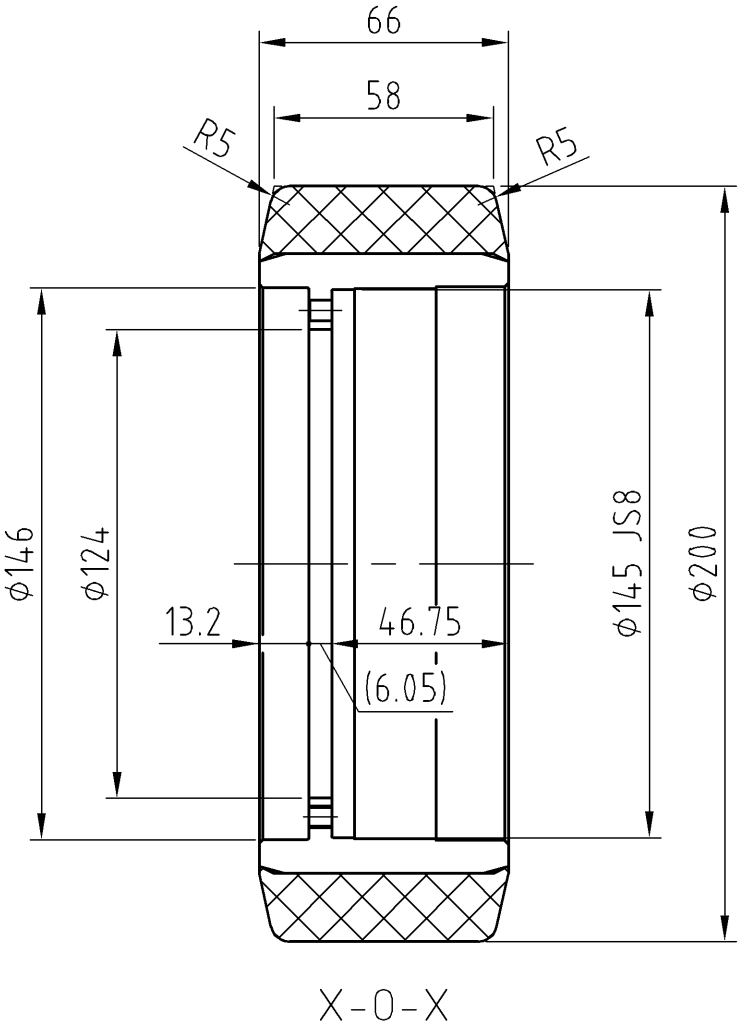

Sumitomo Drive Technologies

Sumitomo Heavy Industries, Ltd.

smartris OUTLINE DRAWING

DWG.NO. CH62675G0

5097P