OUTSIDE DIMENSIONS

Dimensions in mm

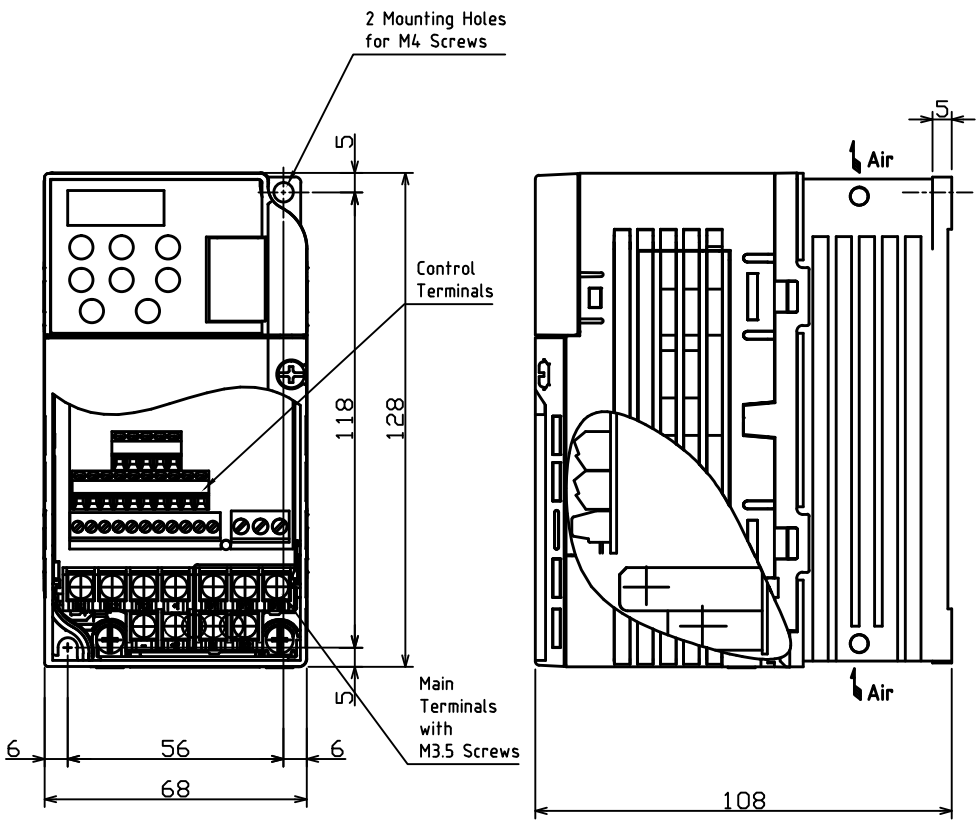

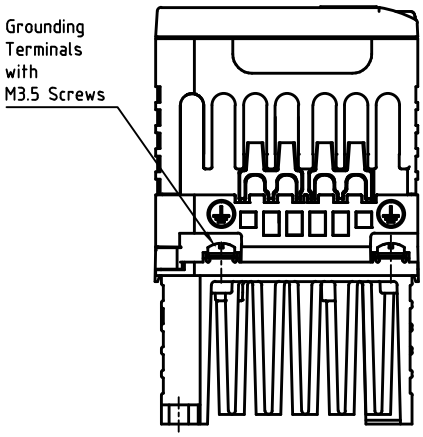

許容スペース

Minimum allowable space

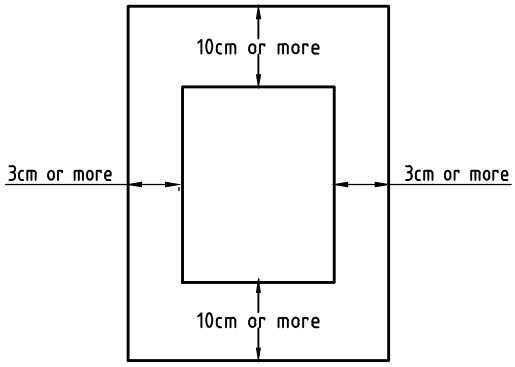

Mass: 0.9kg

HF5202-A40, HFX202-A40

ご注文主： Customer:	△	Inverter HF-520/HF-X20 0.4kW/3φ200V
製番： Manuf. No.:	△	
台数： On Order:	△	

Sumitomo Drive Technologies

Sumitomo Heavy Industries, Ltd.

DWG. No. JT520AW

DATE APR. 16. 2014