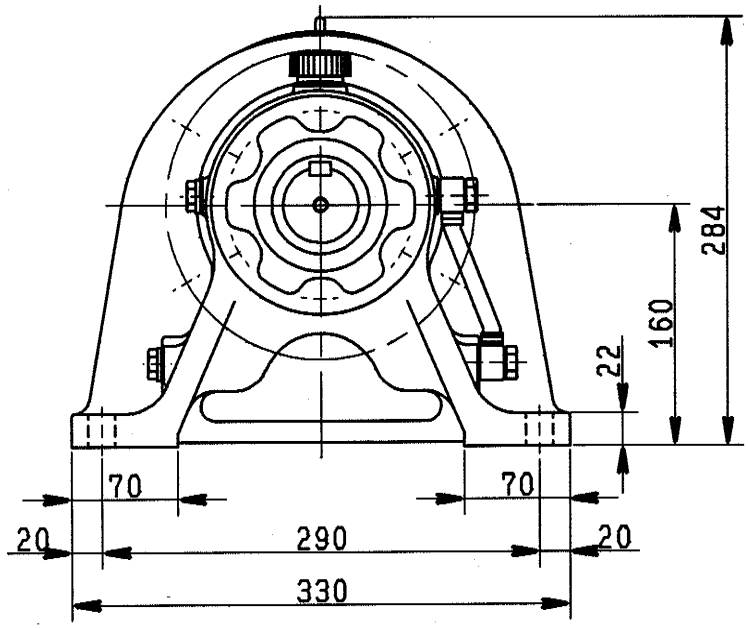

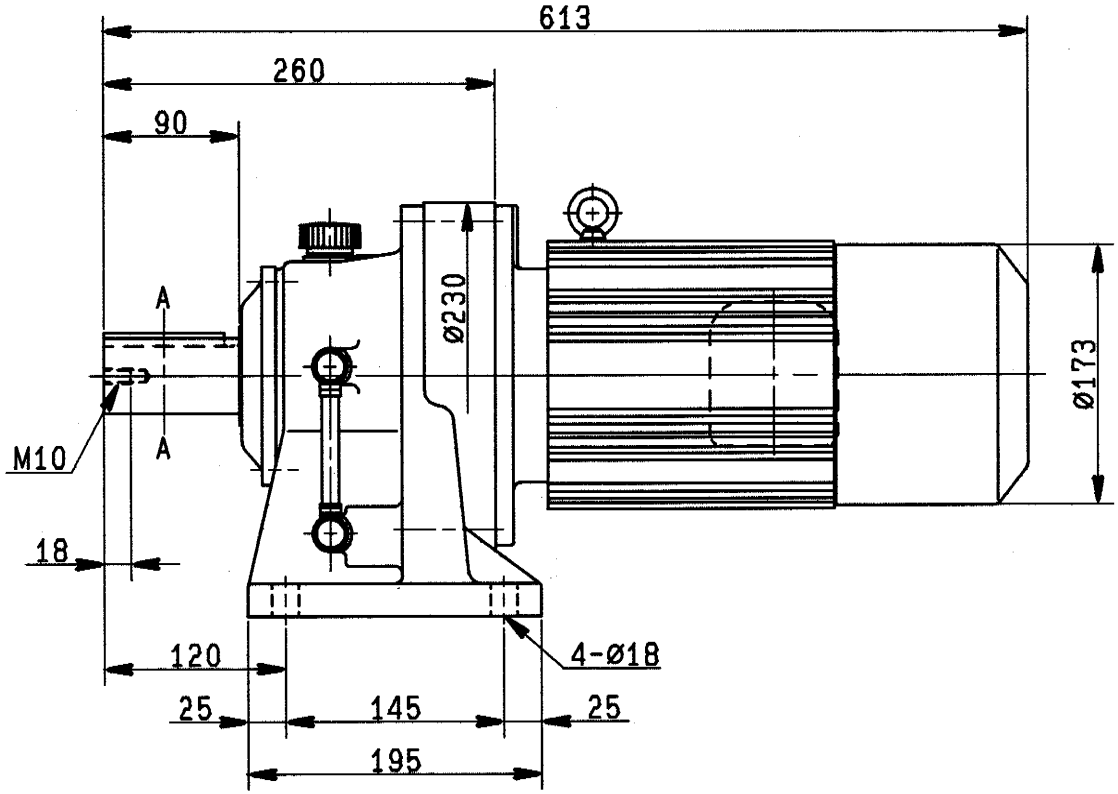

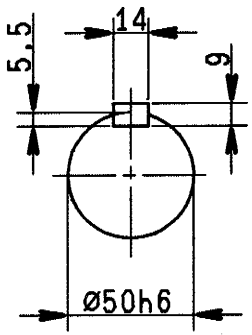

A-A

SUMITOMO HEAVY INDUSTRIES, LTD.
TOKYO, JAPAN

CYCLO DRIVE OUTLINE DRAWING

DWG.NO. CF32636G0