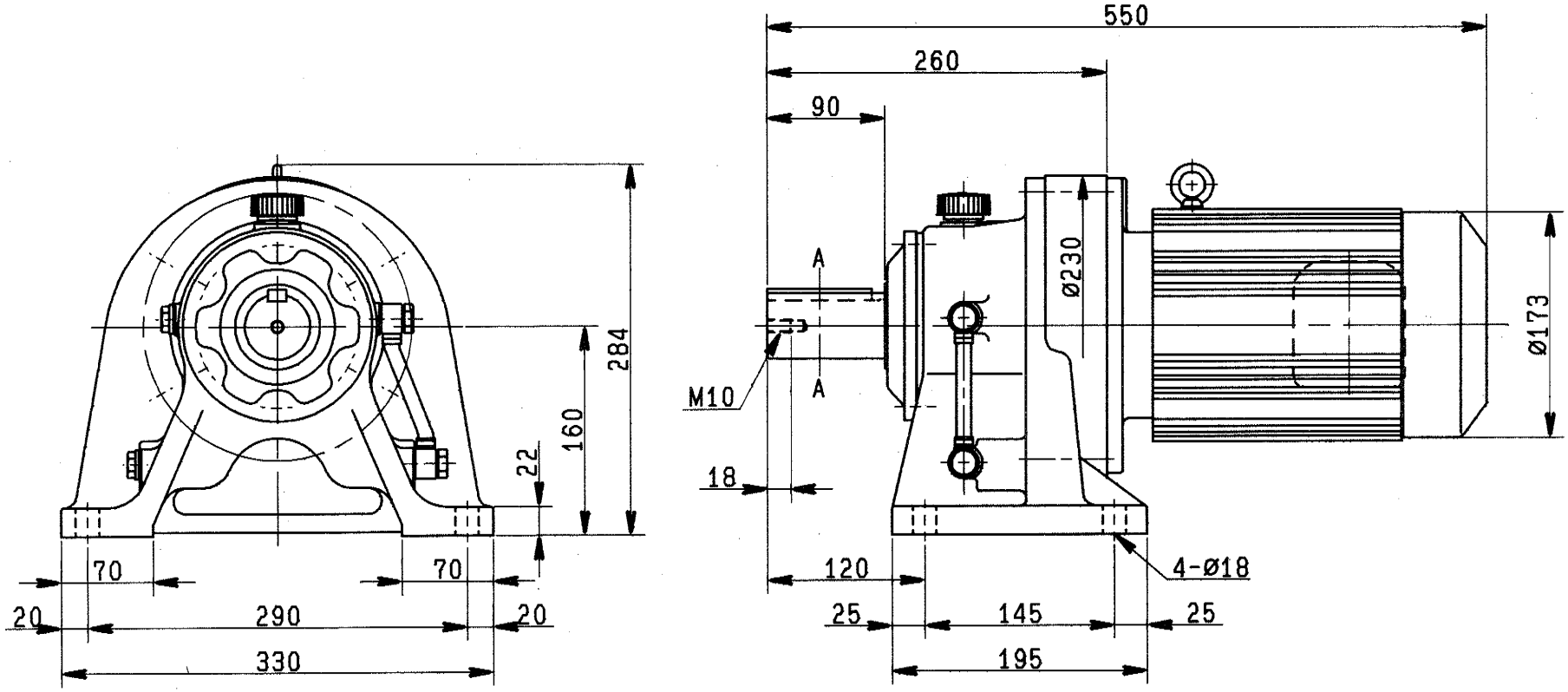

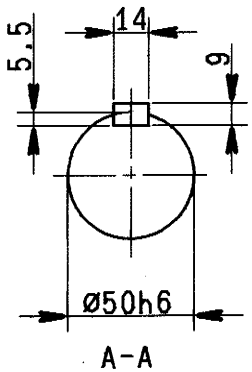

SUMITOMO HEAVY INDUSTRIES, LTD.
TOKYO, JAPAN

CYCLO DRIVE OUTLINE DRAWING

DWG. NO. CF29993G0