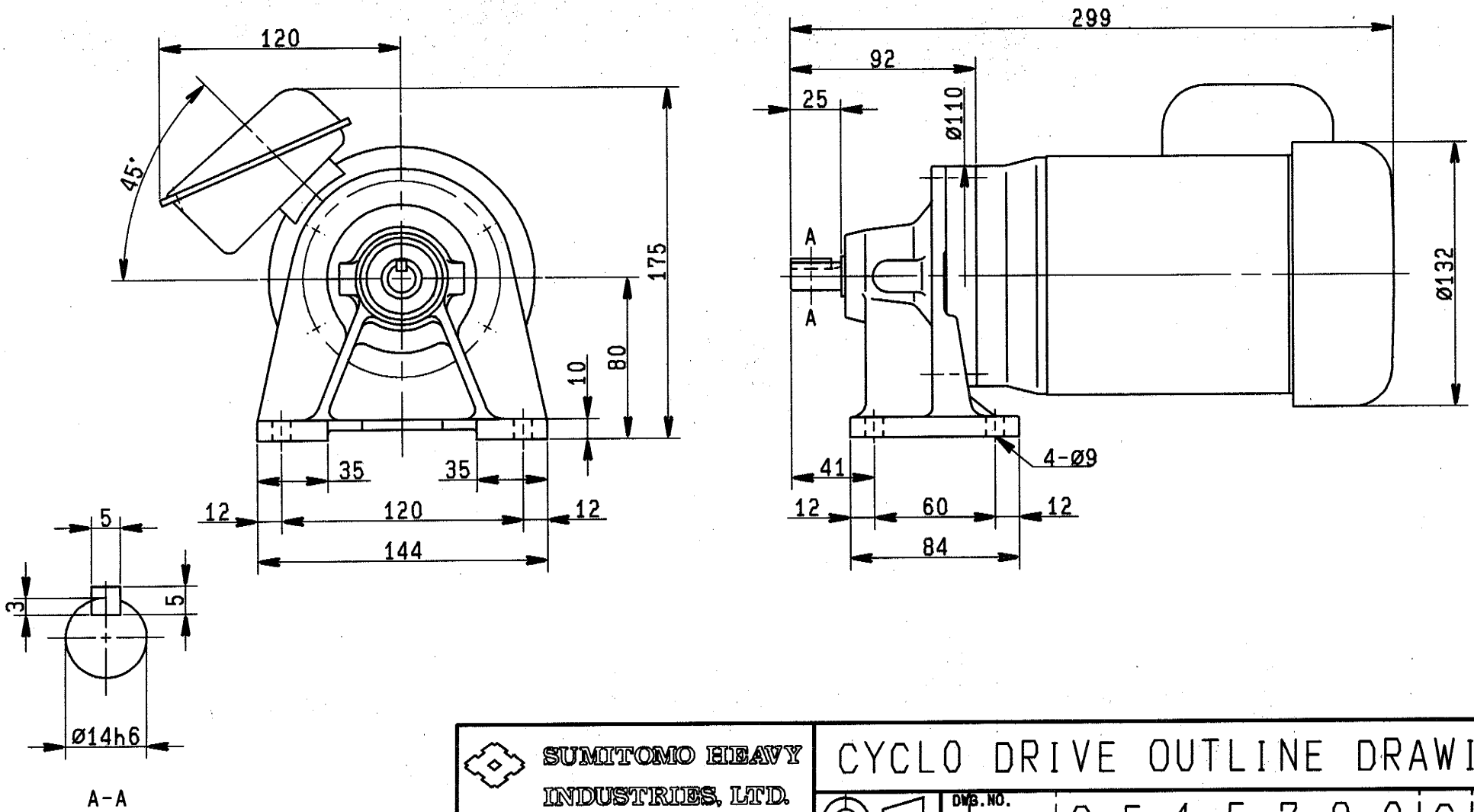


SUMITOMO HEAVY INDUSTRIES, LTD.
TOKYO, JAPAN

CYCLO DRIVE OUTLINE DRAWING

DWG.NO. CF15780G0